ALTIS P5364APW0001

JOHNSON

WALL HUNG WATER CLOSET

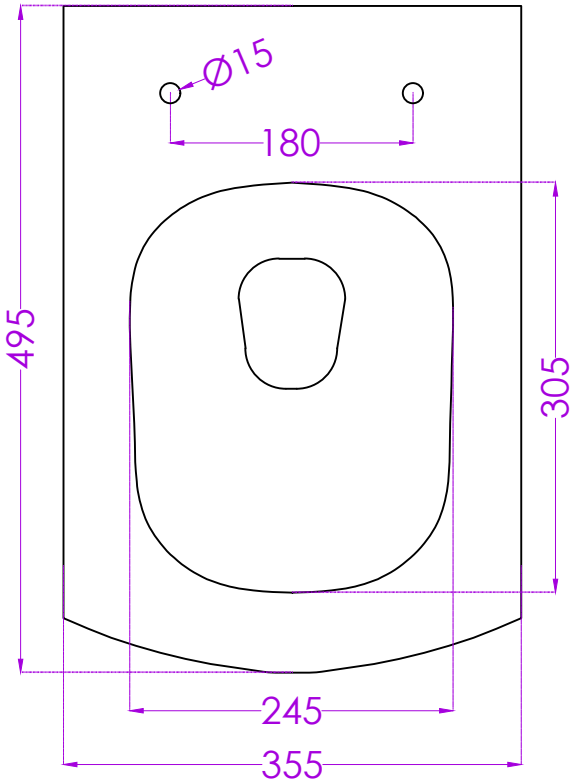

PLAN

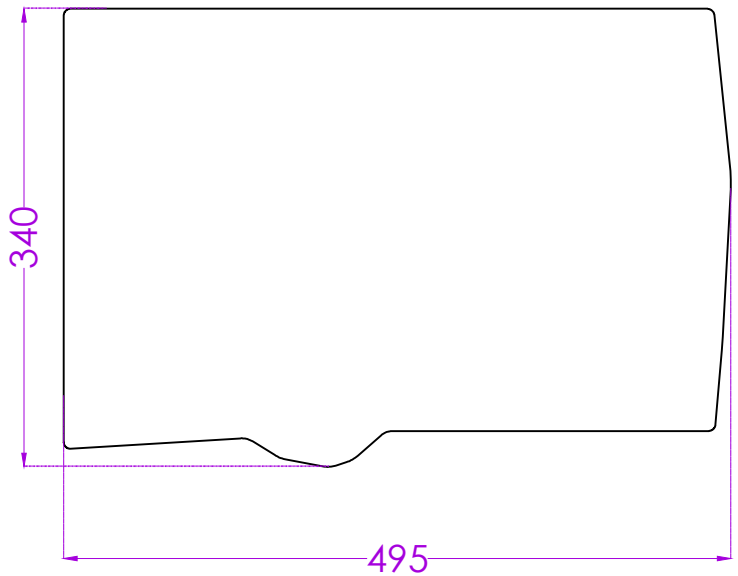

SIDE

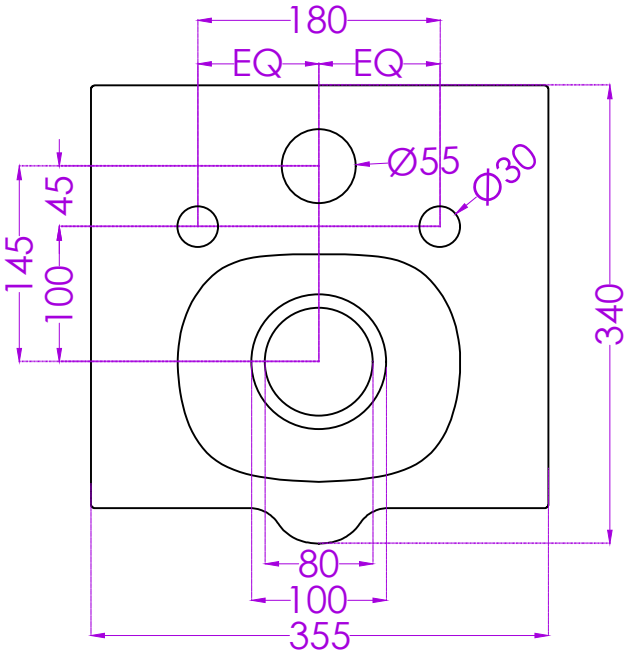

BACK